ITEM NO.	PART NUMBER	DESCRIPTION	DESCRIPTION 2	QTY.
1	POLE	POLE, DIRECT BURIAL	-	1
2	CAP-0001	CAP, 4.5" TIP	-	1
3	COV-0012	HANDHOLE COVER, 2-1/2" X 5"	ROUND TAPERED	1
4	RN0250-0003	RIVET NUT, 1/4-20	.280 - .500 GRIP RANGE	2
5	PS0250	PHILLIPS SCREW 1/4"-20 X 1"	-	2

REVISIONS				
ECO	REV.	DESCRIPTION	DATE	INITIALS

FEATURE ORIENTATIONS				
	0°	90°	180°	270°
CABLE ENTRY	X			
HAND HOLE	X			

NOTE: ALL HOLES DRILLED ONLY THROUGH THE FACES SPECIFIED BY 'X'

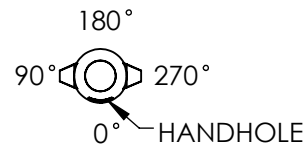

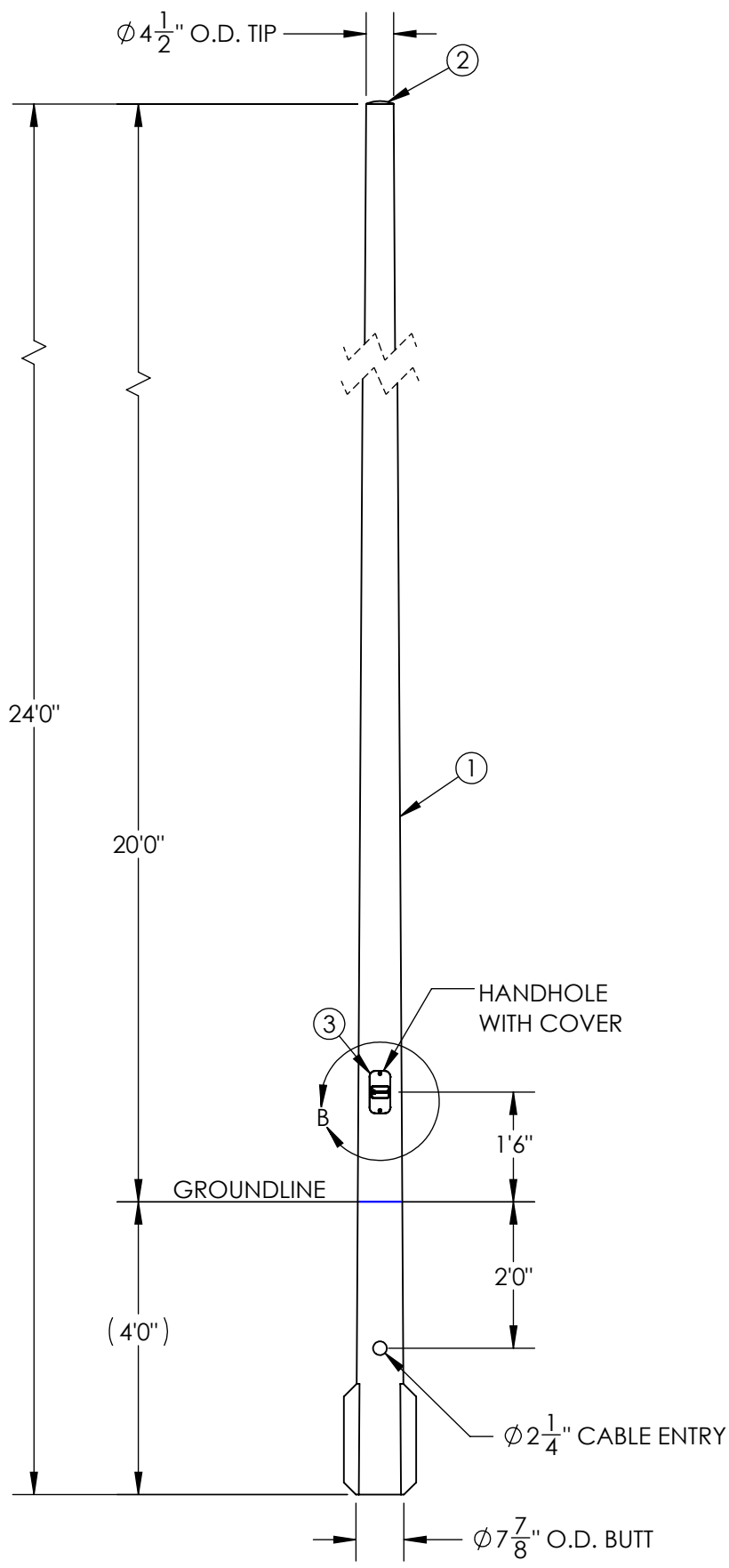

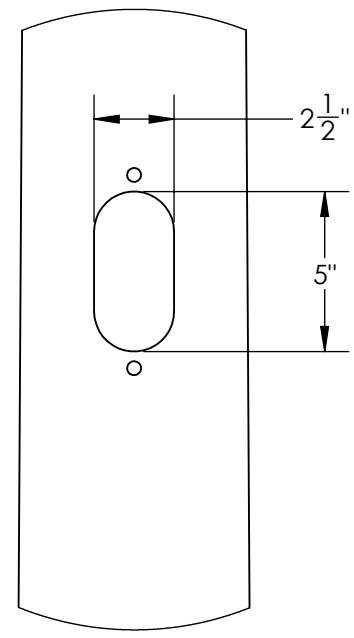

DETAIL B
HANDHOLE CUTOUT
COVER REMOVED FOR CLARITY
SCALE 1 : 6

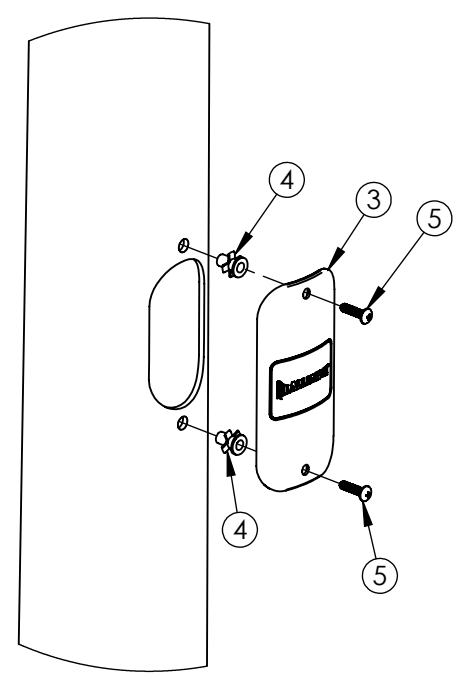

DETAIL A
COVER ASSEMBLY
SCALE 1 : 6

MAXIMUM EPA PER WINDZONE										
MPH	90	100	110	120	130	140	150	160	170	180
EPA	19.1	14.5	11.3	9.2	7.8	7.4	6.3	5.4	4.7	4.1

NOTES:
1. DIRECT BURIAL CLASS 1 POLE PER ASTM 4923. POLE TOP DEFLECTION SHALL NOT EXCEED 15% OF THE ABOVE GROUND HEIGHT AT MAXIMUM WIND LOADING AND MAXIMUM FIXTURE WEIGHT.
2. DESIGN CRITERIA PER AASHTO LTS-6-2013 WITH A MINIMUM SAFETY FACTOR OF 1.5 PER ANSI C136.20-2012.
3. WIND SPEEDS DEFINED AS 3 SECOND GUST PER ASCE 7-16 WITH VELOCITY CONVERSIONS PER 2018 IBC 1609.3.1.
4. EMBEDMENT BASED ON MINIMUM DEPTH RECOMMENDED BY ANSI C136.20-2012 SECTION 5.3 AND ASSUMING CLASS 1 SOIL OR BETTER WHEN LOADED AT MAXIMUM EPA.

N = NATURAL FINISH
S = SMOOTH FINISH

D4TE24F00↑1↓GXHH

G = GRAY
A = BLACK
F = BRONZE
W = WHITE
N = GREEN

---UNLESS OTHERWISE SPECIFIED---
DIMENSION UNITS ARE IN FEET AND INCHES
DIMENSIONS SHOWN ARE NOMINAL

STATE:	REVIEW	2025-07-24
DRAWN:	STK	2025-07-23
CHECKED:	AKS	2025-07-24
APPROVED:		
REPLACES:	-	

PROPRIETARY AND CONFIDENTIAL
THE INFORMATION CONTAINED IN THIS DRAWING IS THE SOLE PROPERTY OF GEOTEK. ANY REPRODUCTION IN PART OR AS A WHOLE WITHOUT THE WRITTEN PERMISSION OF GEOTEK IS PROHIBITED.

THIRD ANGLE PROJECTION

CUSTOMER SIGNATURE: DATE:

-REFERENCES-
alliancecompositesinc.com/warranty
geotek.com/termsandconditions

GEOTEK
A Whole New World of Composites

ALLIANCE™

DESCRIPTION:
POLE ASSEMBLY, DIRECT BURIAL
EXTRA HEAVY DUTY, 24 FT

1421 SECOND AVE NW
STEWARTVILLE, MN 55976
(800) 533-1680
www.geotek.com

SIZE: B
DWG. NO. D4TE24F00X1XGXHH
POLE COLOR:
REV: 0.0
SCALE: 1:28
SHEET 1 OF 1