ITEM NO.	PART NUMBER	DESCRIPTION	DESCRIPTION2	QTY.
1	POLE	POLE, DIRECT BURIAL	-	1
2	CAP-0015M	CAP, 4.5" TIP	BLACK	1
3	COV-0012	HANDHOLE COVER, 2-1/2" X 5"	ROUND TAPERED	1
4	RN0250-0003	RIVET NUT, 1/4-20	.280 - .500 GRIP RANGE	2
5	PS0250	PHILLIPS SCREW 1/4"-20 X 1"	-	2

REVISIONS				
ECO	REV.	DESCRIPTION	DATE	INITIALS
	1.0	PS0250 WAS PS0250-0008, UPDATE DRAWING FORMAT	7/17/2025	ARK

FEATURE ORIENTATIONS				
	0°	90°	180°	270°
CABLE ENTRY	X			
HAND HOLE	X			

NOTE: ALL HOLES DRILLED ONLY THROUGH THE FACES SPECIFIED BY 'X'

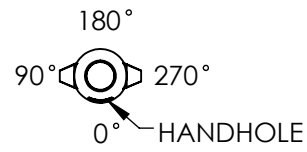

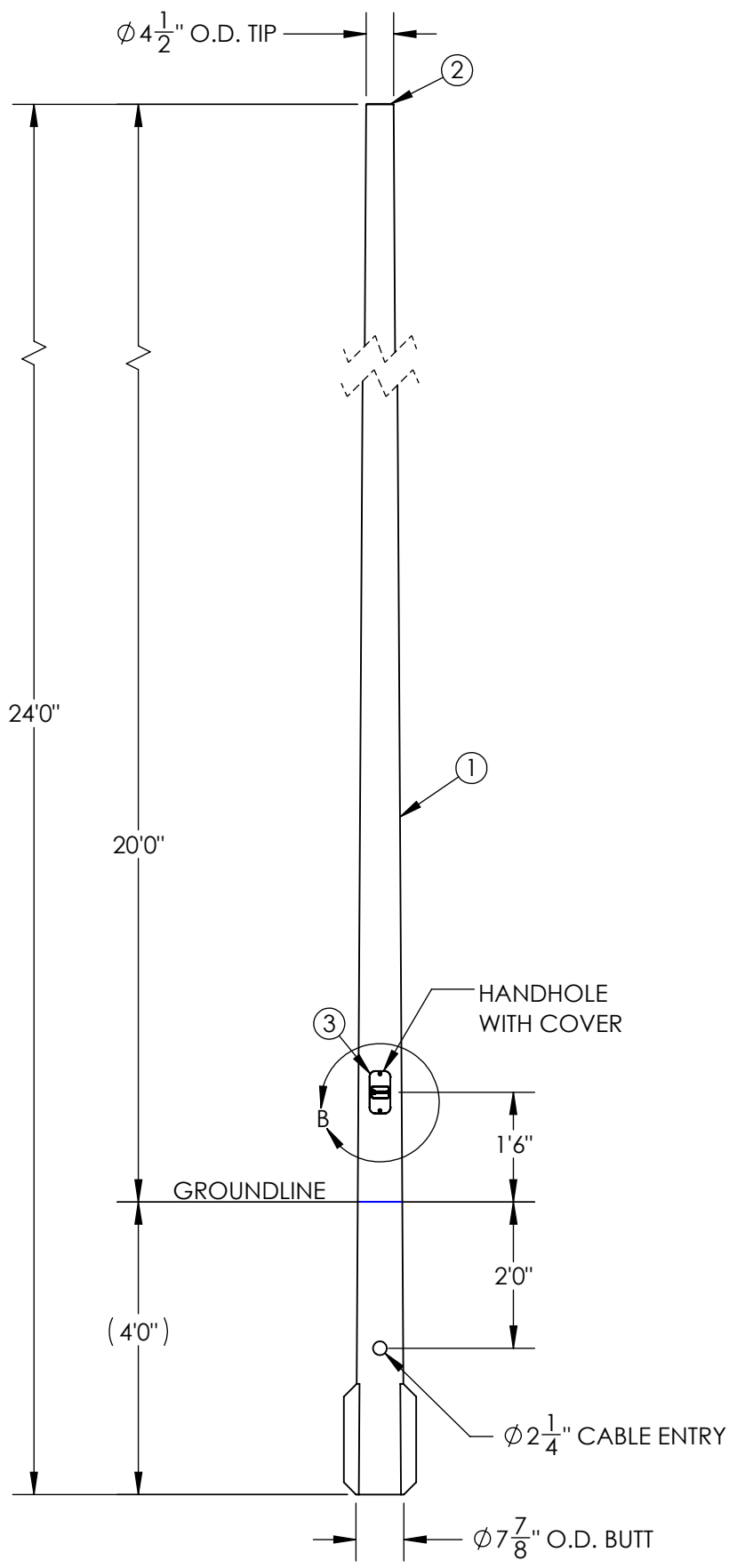

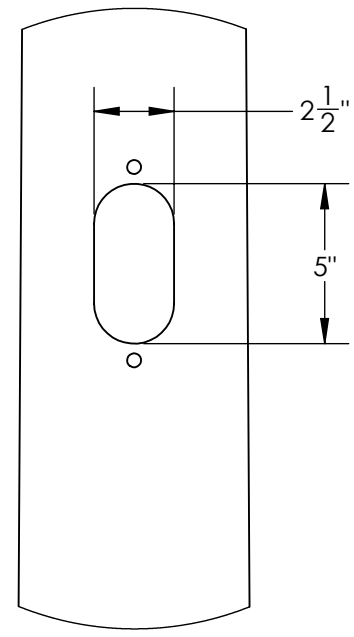

DETAIL B
HANDHOLE CUTOUT
COVER REMOVED FOR CLARITY
SCALE 1 : 6

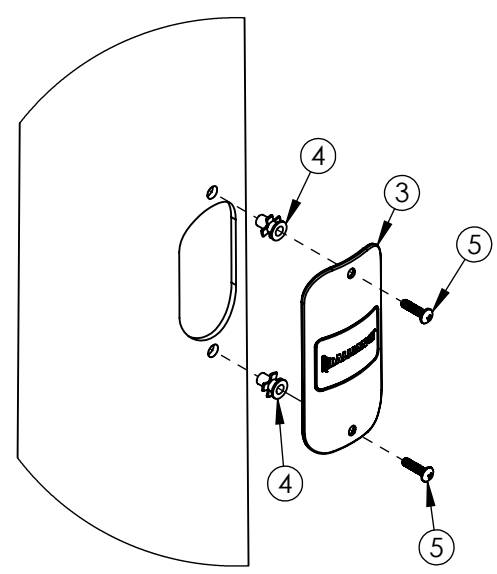

DETAIL A
COVER ASSEMBLY
SCALE 1 : 6

MAXIMUM EPA PER WINDZONE										
MPH	90	100	110	120	130	140	150	160	170	180
EPA	9.1	6.5	4.6	3.6	2.9	2.8	2.3	1.9	1.5	1.3

N = NATURAL FINISH
S = SMOOTH FINISH

D4TS24F00↑1↓GXHHM

G = GRAY
A = BLACK
F = BRONZE
W = WHITE
N = GREEN

NOTES:
1. DIRECT BURIAL CLASS 1 POLE PER ASTM 4923. POLE TOP DEFLECTION SHALL NOT EXCEED 15% OF THE ABOVE GROUND HEIGHT AT MAXIMUM WIND LOADING AND MAXIMUM FIXTURE WEIGHT.
2. DESIGN CRITERIA PER AASHTO LTS-6-2013, WITH A MINIMUM SAFETY FACTOR OF 1.5 PER ANSI C136.20-2012.
3. WIND SPEEDS DEFINED AS 3 SECOND GUST PER ASCE 7-16 WITH VELOCITY CONVERSIONS PER 2018 IBC 1609.3.1.
4. EMBEDMENT BASED ON MINIMUM DEPTH RECOMMENDED BY ANSI C136.20-2012 SECTION 5.3 AND ASSUMING CLASS 2 SOIL OR BETTER WHEN LOADED AT MAXIMUM EPA.

---UNLESS OTHERWISE SPECIFIED---
DIMENSION UNITS ARE IN FEET AND INCHES
DIMENSIONS SHOWN ARE NOMINAL

STATE:	REVIEW	2025-07-21
DRAWN:	BMR	2023-04-03
CHECKED:	BLZ	2025-07-21
APPROVED:		
REPLACES:	-	

GEOTEK
A Whole New World of Composites

ALLIANCE™

PROPRIETARY AND CONFIDENTIAL
THE INFORMATION CONTAINED IN THIS DRAWING IS THE SOLE PROPERTY OF GEOTEK. ANY REPRODUCTION IN PART OR AS A WHOLE WITHOUT THE WRITTEN PERMISSION OF GEOTEK IS PROHIBITED.

THIRD ANGLE PROJECTION

DESCRIPTION:
POLE ASSEMBLY, DIRECT BURIAL
STANDARD DUTY, 24 FT

1421 SECOND AVE NW
STEWARTVILLE, MN 55976
(800) 533-1680
www.geotek.com

CUSTOMER SIGNATURE: DATE:

-REFERENCES-
alliancecompositesinc.com/warranty
geotek.com/termsandconditions

SIZE: B | DWG. NO. **D4TS24F00X1XGXHHM** | POLE COLOR: | REV: 1.0

SCALE: 1:28 | SHEET 1 OF 1